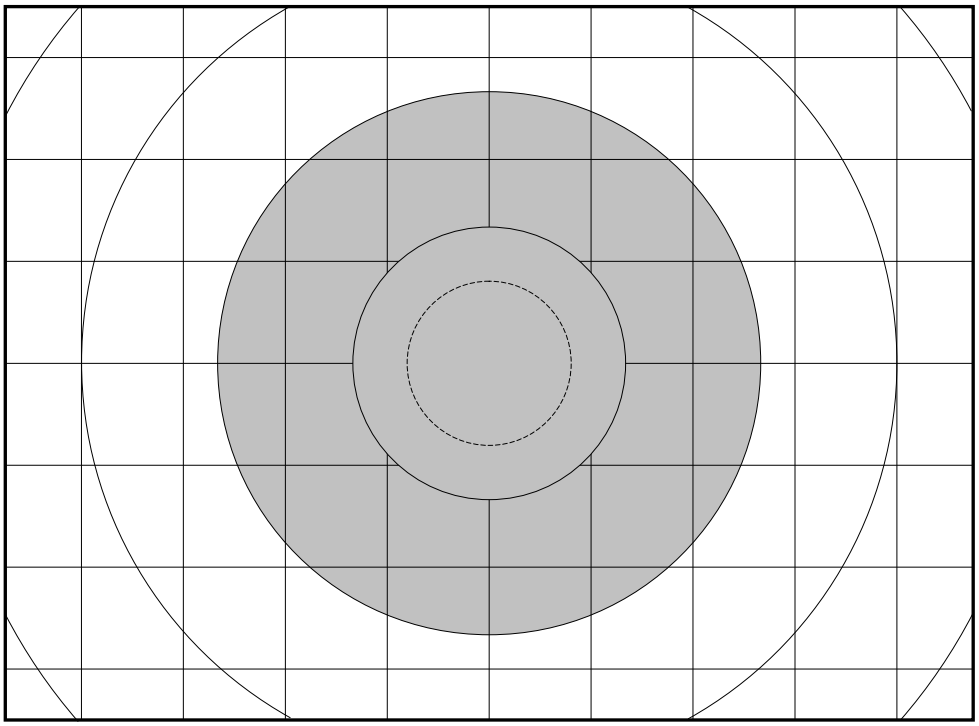

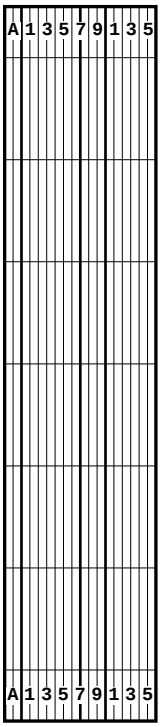

SHOT	ELEV	WIND L	WIND R	CALL	SCORE
A					
B					
1					
2					
3					
4					
5					
6					
7					
8					
9					
0					
1					
2					
3					
4					
5					
PREVIOUS RANGES				TOT	
				AGG	

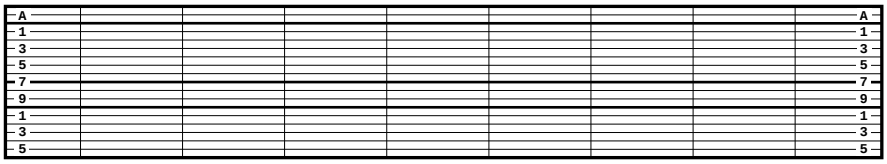

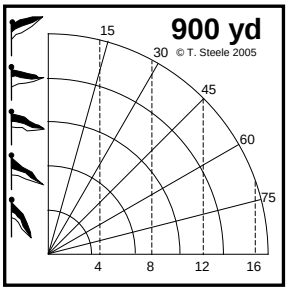

EVENT		DATE	TIME
RANGE	TARGET	WEATHER	LIGHT
RIFLE	AMMN	FORESIGHT	REARSIGHT

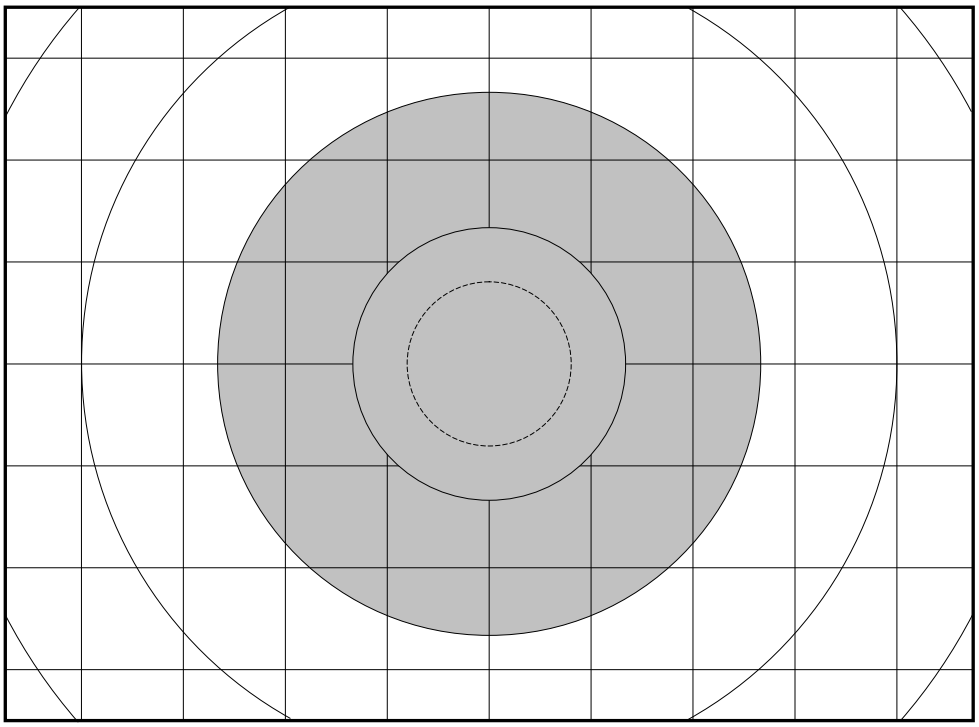

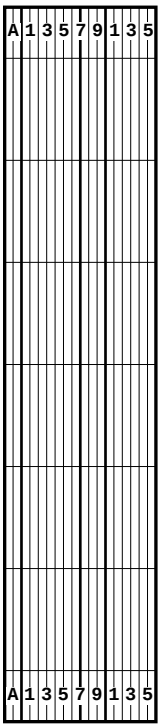

SHOT	ELEV	WIND L	WIND R	CALL	SCORE
A					
B					
1					
2					
3					
4					
5					
6					
7					
8					
9					
0					
1					
2					
3					
4					
5					
PREVIOUS RANGES				TOT	
				AGG	

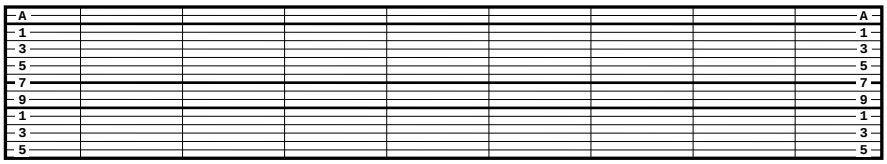

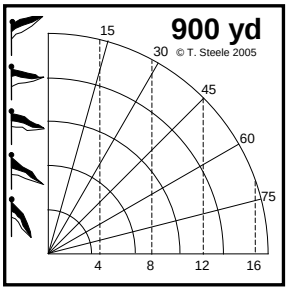

EVENT		DATE	TIME
RANGE	TARGET	WEATHER	LIGHT
RIFLE	AMMN	FORESIGHT	REARSIGHT